Series 2000 Garage Doors

Superior design, engineering excellence

HÖRMANN

CONTENT

4 Good reasons to try Hörmann

6 Hörmann Series 2000 steel up-and-over doors

10 Hörmann Series 2000 timber up-and-over doors

14 Hörmann Series 2000 GRP up-and-over doors

18 Glazings

19 Manual release

20 Overview of colour and surface finishes

22 Retractable door

24 Canopy door

26 The open-for-infill frame

28 Door renovations

32 The innovative Hörmann operators

36 Accessories

40 Fitting details

Please note:

Some of the doors shown are equipped with optional extras and do not always correspond to our standard models.

The surface finishes and colours shown are subject to the limitations of the printing process and cannot be regarded as binding.

All rights reserved. No part may be reproduced without our prior permission.
Subject to changes.

The complete warranty conditions can be found at www.hormann.co.uk

◀ Marquess, Decograin

"A good name has to be earned." August Hörmann

In line with the founder's philosophy, the Hörmann brand today is a true promise of quality. The family-owned company has over 80 years of experience in door and operator construction and, with sales of over 20 million doors, is no. 1 in Europe. This is very reassuring when buying a Hörmann Series 2000 garage door.

1 Based on German engineering, assembled in the U.K.

All doors and operator components are developed and manufactured by Hörmann. Hörmann Series 2000 garage doors are assembled at the Hörmann factory in Leicestershire from components sourced from both the continent and the UK.

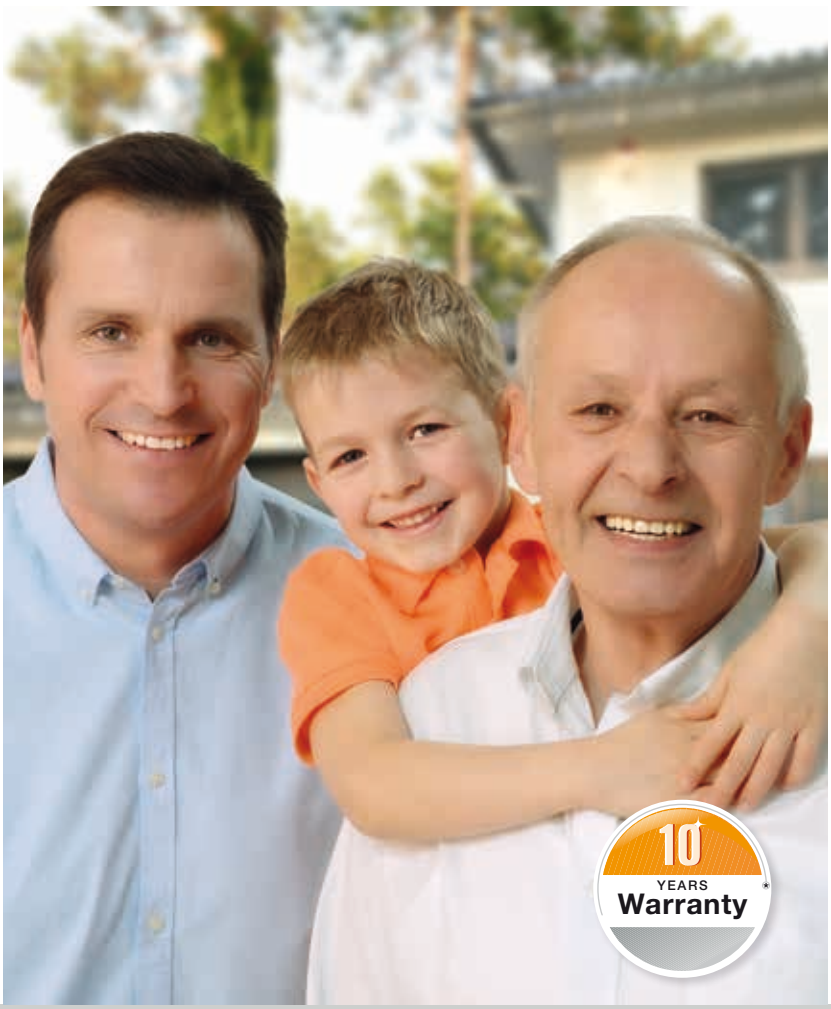

2 Garage doors for generations

Thanks to excellent technical solutions and uncompromising quality assurance, you receive a 10-year warranty on all Series 2000 garage doors and 5 years on all Hörmann operators.*

* The complete warranty conditions can be found at: www.hormann.co.uk

3 An eye on the future

Hörmann is setting a good example. This is why, since 2013, the company has obtained 40 % of its required energy from green sources and will continue to increase this percentage. At the same time, many tonnes of CO^2 are saved each year thanks to the introduction of an intelligent and certified energy management system. And last but not least, Hörmann also offers products for sustainable construction. Find out more about Hörmann's environmental activities in the "We think green" brochure.

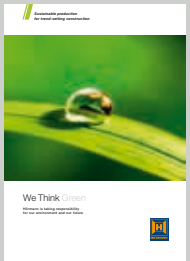

Hörmann Series 2000 steel up-and-over doors

Series 2000 steel doors are timeless in appearance, never ageing your property. Whether choosing one of the ribbed or panelled designs, they offer a quiet elegance blending in with any environment whilst giving a lasting prestige.

The doors are galvanised with a high-quality polyester powder-coating and come protected against adverse weather conditions and corrosion, maintaining the long term beauty of the door.

▶ Style 2601 Elegance, Traffic white, RAL 9016

53 JEP

Style 2001 Vertical
Traffic white, RAL 9016

Style 2002 Horizontal
Traffic white, RAL 9016

Style 2601 Elegance
only available in Traffic white, RAL 9016

Style 2602 Finesse
only available in Traffic white, RAL 9016

Style 2003 Chevron
only available in Traffic white, RAL 9016

Style 2103 Caxton
only available in Traffic white, RAL 9016

Style 2101 Ilkley
Traffic white, RAL 9016

Style 2004 Georgian
Traffic white, RAL 9016
also available in Decograin

Style 2304 Georgian with window
Traffic white, RAL 9016

Countess
only available Traffic white, RAL 9016

Marquess
Traffic white, RAL 9016
also available in Decograin

Vertical Decograin Golden Oak
also available in Rosewood

Horizontal Decograin Rosewood
also available in Golden Oak

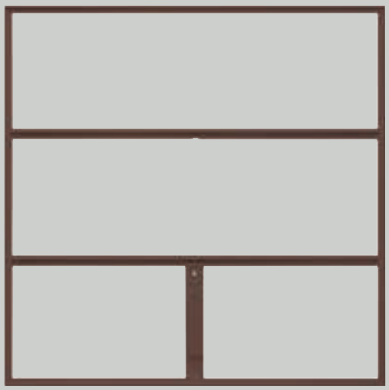

Style 2011 Open-for-infill frame
Terra brown, RAL 8028
also available in Traffic white, RAL 9016

2001 Vertical

2004 Georgian

2601 Elegance

Side door styles

Side doors come with a profile cylinder lock and a black, synthetic lever/lever handle set as standard. They are optionally available in the same material choices as the garage door handles, please see page 19.

Matching side doors are available for all steel designs except 2101, 2103, 2504.

Hörmann Series 2000 timber up-and-over doors

Whatever the style of your property, traditional or modern architecture, our styles of timber doors in either panelled or tongued and grooved design, offer you the choice to find a style that will add warmth and character to your home.

The carefully selected cedar wood is not only chosen for its aesthetic beauty but also for its natural durability.

▲ Style 2009 Vertical, Light Oak

▲ Style 2010 Chevron, Light Oak

◀ Style 2009 Vertical, Golden Oak

Please note:

All our timber doors are carefully manufactured and supplied with a factory-finish dip immersion coat, for temporary protection. We use Remmers Induline GW306 base stain primer 006 Light Oak. Additional on-site finishing is required. Fully finished wood stain and colour options are also available. With wood being a natural product, any finish may vary and movement of components and joints may occur, particularly in changes of weather from very wet to hot sunshine. This is what gives your door its individual character.

Wood needs protecting. That's why, in addition to the factory impregnation, it is important to apply a pigmented wood preservative to a timber garage door, in order to protect it against atmospheric influences and the effects of UV rays.

Style 2005 Measham

Style 2007 Jacobean

Style 2008 Tudor

Style 2014 Rutland

Style 2009 Vertical
also available in Horizontal

Style 2010 Chevron

Style 2013 Caxton

Style 2019 Garage Light

Style 2020 Gatcombe

Style 2109 Mallory
available in Horizontal or Vertical

Style 2114 Shepshed

Style 2119 Leicester

Style 2121 Chesterfield

Style 2122 Middleton

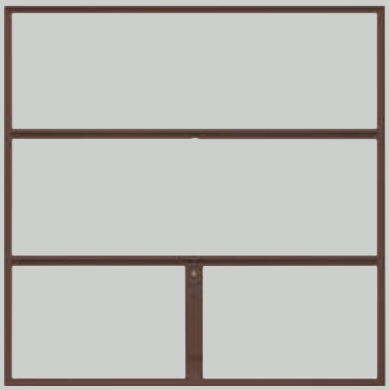

Style 2011 Open-for-infill frame
Terra brown, RAL 8028
also available in Traffic white, RAL 9016

2019 Garage Light

2008 Tudor

2020 Gatcombe

Side door styles

Side doors come with a profile cylinder lock and a black, synthetic lever/lever handle set as standard. Optional available in the same material choices as the garage door handles, please see page 19.

Matching side doors are available for all timber designs.

Hörmann
Series 2000 GRP up-and-over doors

If low maintenance is an important factor to you, a Glass Reinforced Polyester door is just what you're looking for. While requiring minimum maintenance it will give you the long-lasting elegant look and character of genuine timber.

Our GRP doors are available in a supersmooth, high gloss white finish and a variety of timber looks.
You will surely find the right finish to complement all your architectural requirements.

The timber character surface finish of GRP doors is not only different by colour but also by its underlying appearance.

▲ Style 2034 Penshurst, Cherry Oak Woodgrain

◀ Style 2041 Coniston, White supersmooth

Style 2034 Penshurst
available in White woodgrain,
Mahagony woodgrain,
Dark Oak and Cherry Oak woodgrain

Style 2035 Hartfield
available in White woodgrain,
Mahagony woodgrain,
Dark Oak and Cherry Oak woodgrain

Style 2040 Livingston
available in White woodgrain,
Mahagony woodgrain,
Dark Oak and Cherry Oak woodgrain

Style 2041 Coniston
available in White supersmooth

Style 2042 Windermere
available in White woodgrain,
Mahagony woodgrain,
Dark Oak and Cherry Oak woodgrain

Style 2044 Stamford
available in White supersmooth

Style 2047 Bourton
available in White woodgrain,
Mahagony woodgrain, Dark Oak
and Countryside Oak woodgrain

Style 2048 Burford
available in White woodgrain,
Mahagony woodgrain, Dark Oak
and Countryside Oak woodgrain

Style 2049 Moreton
available in White woodgrain,
Mahagony woodgrain, Dark Oak
and Countryside Oak woodgrain

Style 2041 Coniston with windows
available in White supersmooth

Style 2042 Windermere with windows
available in White woodgrain,
Mahagony woodgrain,
Dark Oak and Cherry Oak woodgrain

Clear views with glazing

An additional glazing is not just a design element. Daylight ensures a bright, friendly atmosphere. Ideal, if the garage is also used as a workshop.

Select depending on the door style different types of glazing.

1 Georgian, plain
2 Georgian, diamond
3 Georgian, crossed
4 Ilkley, crystal
5 Ilkley, black
6 Plain
7 Diamond
8 Crossed
9 Plain, clear
10 Crossed, clear
11 Diamond, translucent
12 Stamford, translucent
13 Stamford, black

* All windows come with crystal panes. Frames come white as standard with colour options available.

** The simulated 'leaded light' designs can be combined with a clear or stippled opaque pane. Panes are made of tough, durable perspex.

*** The simulated 'leaded light' designs can be combined either with a clear or translucent pane. Stamford design is supplied with black glazing as standard and translucent as an option. All panes are made of tough, durable, perspex.

Series 2000 Steel up-and-over Georgian and Ilkley designs *

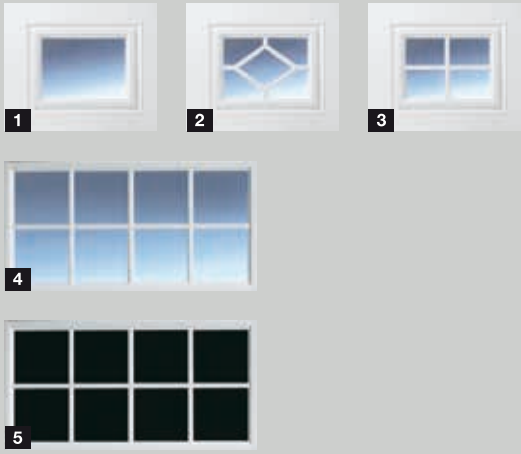

Series 2000 Timber up-and-over Garage light design **

Glazing options for Series 2000 GRP up-and-over Coniston, Windermere and Stamford designs ***

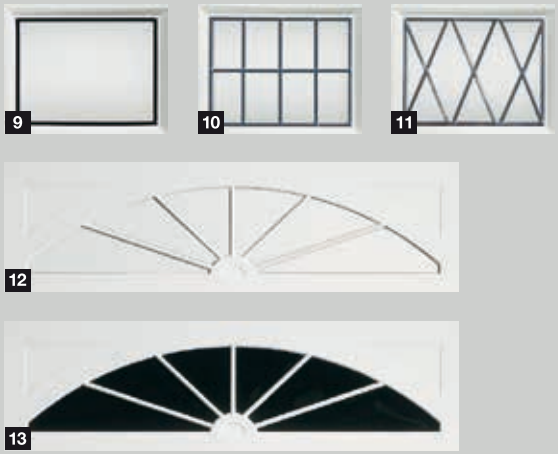

A beautiful handle adds value

Its ergonomic design gives you a safe and firm grip. Side doors come with a profile cylinder lock and a black, synthetic lever / lever handle set as standard. They are available in the same material choices as the garage door handles. Optional lever / knob handle set available.

1 Synthetic black, standard
2 Side door handle black, standard
3 Cast aluminium, white
4 Cast aluminium, brown
5 Cast aluminium, silver finish
6 Brushed, stainless steel
7 Cast aluminium, brass finish
8 Polished, stainless steel

Choose between Steel, Timber and GRP design

All our steel door designs come in Traffic white (RAL 9016) as standard, except for the open-for-infill frame which comes in Terra brown (RAL 8028).

Contact your Hörmann specialist dealer for advice regarding coloured doors.

Colour options for Steel design

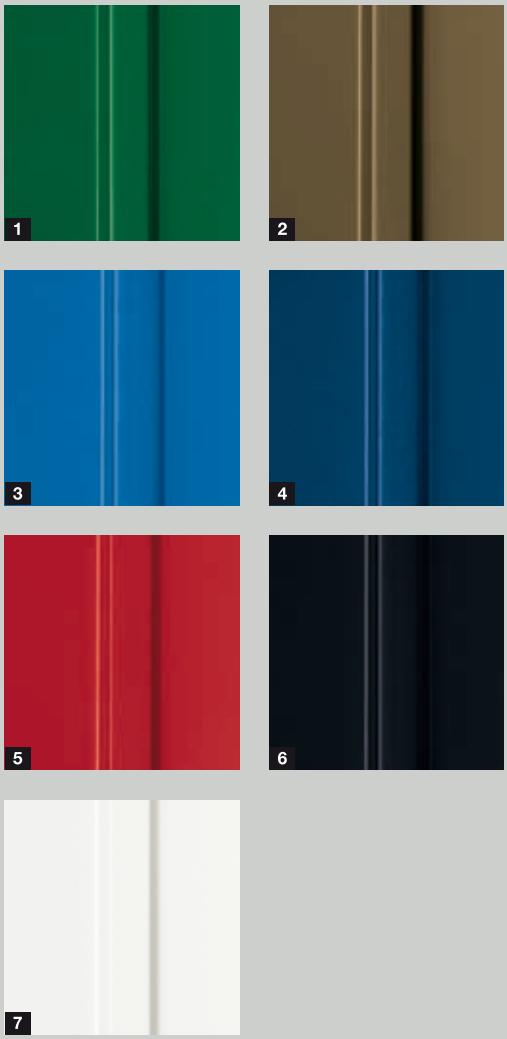

Surface options for Steel design

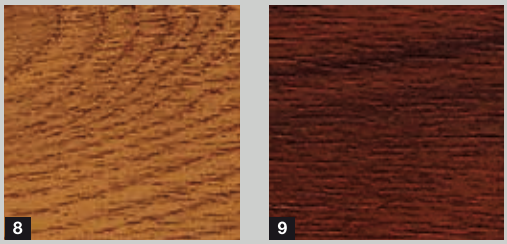

1 RAL 6005 Moss green
2 RAL 8028 Terra brown
3 RAL 5005 Signal blue
4 RAL 5011 Steel blue
5 RAL 3003 Ruby red
6 RAL 9005 Jet black
7 RAL 9016 Traffic white
8 Decograin Golden Oak
9 Decograin Rosewood

Wood stain for Timber design *

1 Walnut
2 Ebony
3 Rosewood
4 Medium Oak
5 Light Oak
6 Dark Oak
7 Golden Oak
8 Mahogony
9 Teak

Colour options for all Timber design **

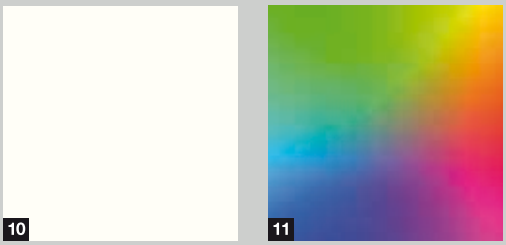

Colour finishes for GRP design

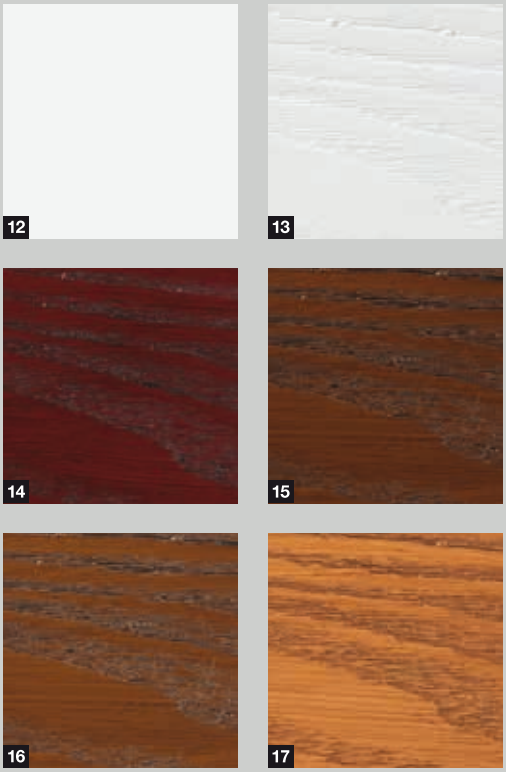

10 White
11 RAL to choose
12 White supersmooth
13 White woodgrain
14 Mahogany woodgrain
15 Dark Oak woodgrain
16 Countryside Oak woodgrain
17 Cherry Oak woodgrain

* With wood being a natural product the finish of the doors supplied may vary from those shown.

** Our timber doors are now available in a white and RAL to choose colour options.

Safety features to the latest European Standard 13241-1

1 Finger-trap protection

2 Track roller well

3 Spring system

Safety checklist
for your old retractable up-and-over door

- [ ] Do flexible plastic strips on the frame and door leaf prevent trapped fingers? 1
- [ ] Is there a safety distance of 25 mm between the lifting arm and the frame? 1
- [ ] Does the bearing bracket have protective caps to prevent injury if inadvertently reached into? 1
- [ ] Is the door safely and securely guided as well as protected against uncontrolled movements? 2
- [ ] Are the tracks designed in such a way that it is impossible for the rollers to derail? 2
- [ ] After opening, does the door come to a safe stop? 2
- [ ] Is the door leaf safeguarded against crashing to the floor? 3
- [ ] Is it guaranteed that even if a spring should break, an imbalance no greater than 200 N is produced? 3
- [ ] Are the springs safeguarded to prevent them from being catapulted into the air? 3
- [ ] Is the spring system designed in such a way that there is no risk of trapped fingers? 3
- [ ] On power-operated up-and-over doors: are the maximum closing forces to EN 13241-1 complied with?

Even if you have answered only one of the above with “no”, your door is no longer safe.

Retractable door

- Retractable mechanisms are ideally suited to automatic operation.
- Single or double door version available.
- An optional 4 point locking kit is available. It comprising steel locking bar rods and slam-shut latches to increase the number of locking points.
- Hörmann offers a steel fixing frame for all single and double retractable doors. This frame makes an on-site timber frame redundant and saves valuable installation time as it is quick and easy to fit.

Safety features to the latest European Standard 13241-1

1 Cable drum

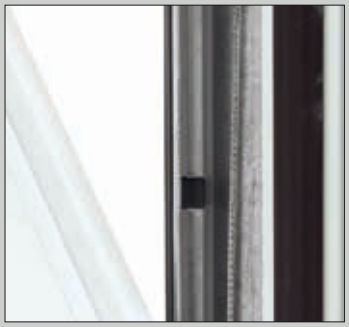

2 Internally guided cables

3 Anti-fall safeguard
4 Protective cover profiles

Safety checklist
for your old canopy up-and-over door

- [ ] Is the door safely and securely guided as well as protected against uncontrolled movements? 1
- [ ] Does your door have a cable drum with deep grooves to ensure the cable fits securely and prevents cables jumping? 1
- [ ] Are the door's cables internally guided? 2
- [ ] Is there an anti-fall safeguard fitted to your present door to prevent injury if a cable breaks? 3
- [ ] Are the tracks designed in such a way that it is impossible for the rollers to derail? 3
- [ ] After opening, does the door come to a safe stop? 3
- [ ] Do protective cover strips on the frame and the door leaf prevent trapped fingers? 4

Even if you have answered only one of the above with "no", your door is no longer safe.

Canopy door

- Only Single door version available.
- An optional 4 point locking kit is available. It comprising steel locking bar rods and slam-shut latches to increase the number of locking points.
- Hörmann offers a steel fixing frame for all single and double retractable doors. This frame makes an on-site timber frame redundant and saves valuable installation time as it is quick and easy to fit.

Design your own door with the open-for-infill frame

- Extremely sturdy frame construction with reinforced struts. Fully welded!
- Min. infill weight: 6 kg per m^2, max. infill weight 10 kg per m^2.
- Fully galvanised, door leaf frame additionally with high-grade polyester primer coating Terra brown (RAL 8028) or Traffic white (RAL 9016).
- Frame and struts pre-drilled at 30 mm spacings.
- Illustrated fitting instructions with suggested designs.

With design 2011 open-for-infill, door widths of up to 5 m are possible (for any width over 4267 mm, please refer to the N500 range) if the permissible infill weight is complied with.

The Hörmann open-for-infill leaf frame is perfectly prepared to accept a timber infill of your own design.

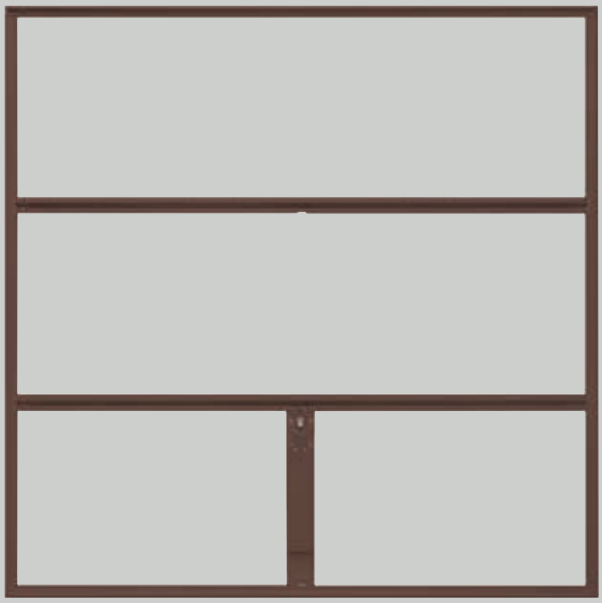

2011 open-for-infill frame
Door width up to 4267 mm

This door construction offers you two design options:

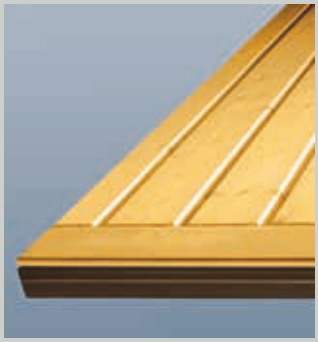

Infill overlapping the frame, whereby the frame and bottom section are entirely concealed.

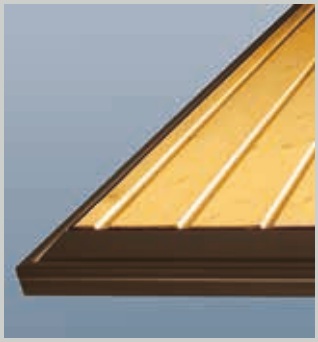

Timber infill within the frame with visible bottom section to protect against spray water.

Hörmann offers optimal solutions for every fitting and renovation situation

Benefit from the inexpensive standard sizes. Of course, we can also easily provide you with any required special solutions.

In addition, your Hörmann partner's all-inclusive package:

- Expert advice
- Measurements on site
- Professional installation
- Construction and environmentally sound disposal

Out with the old – in with the new

Compensation panels and modernisation panels

Should your garage opening be higher and wider than the inexpensive standard sized garage door, simply adjust the sides and the lintel with panels that match the door.
If the brickwork is damaged while removing the old door, modernisation panels 1 ensure a clean result without the need for further plastering.

Rubber bottom profiles (optional)

In garages without a threshold, a flexible, weather-resistant rubber bottom profile helps keep out passing debris.

Optional retractable plus

Still conforming to the EN 13241-1 this gear allows for a clear drive through passage wider than the standard retractable gear.
This makes parking the car in the garage a lot more convenient.

The innovative Hörmann operators for automatic sectional and up-and-over garage doors

Hörmann garage door operators are perfectly matched to your Hörmann garage door. The result: simple operation, maximum convenience and the greatest operational safety. Our elegant hand transmitters allow you to open your gate from your car as easily as you would operate a TV. You can also operate your door using stationary control elements, such as a radio code switch or radio finger-scan.

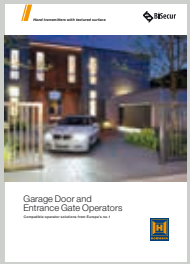

For further information ask your specialist dealer for this brochure or visit **www.hormann.co.uk**

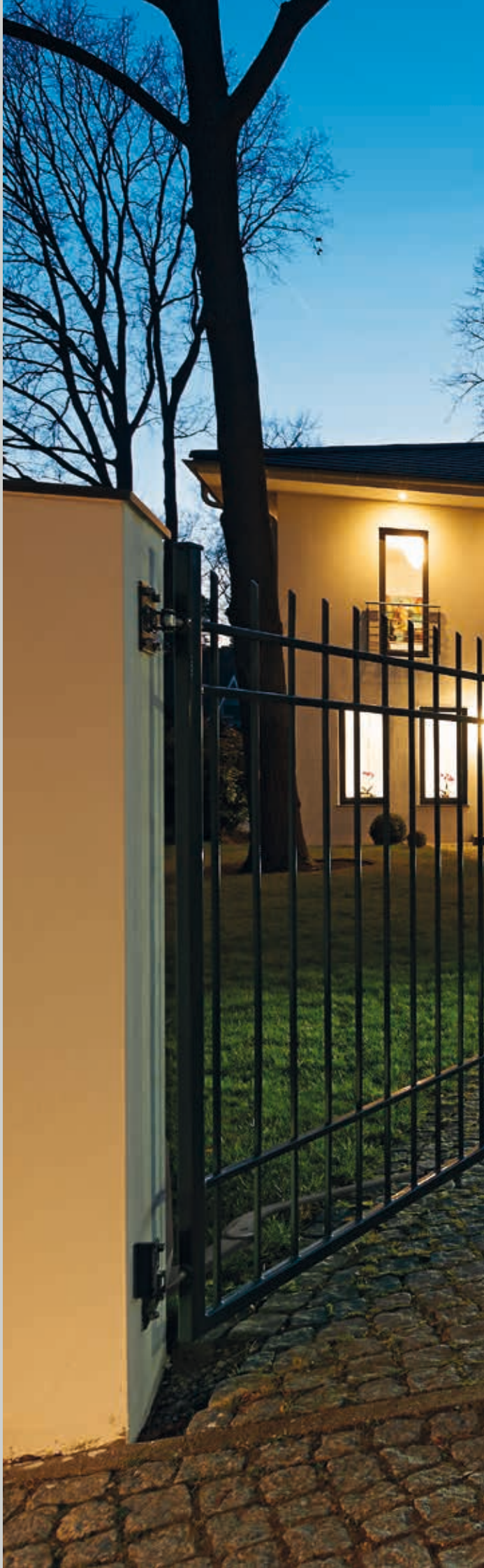

B1 BE 840

SupraMatic, the supra-fast operator with many additional functions

- As standard with the 5-button hand transmitter HS 5 BS and 2-button hand transmitter HSE 2 BS with black textured surface
- Inquiry of the door position
- Low power consumption
- Easy to program
- 2x 7-segment display
- Halogen lighting can be switched on / off separately
- Adjustable venting feature
- Operator cover made of brushed aluminium

HS 5 BS
textured black
with chrome caps

HSE 2 BS
textured black
with plastic caps

	SupraMatic E	SupraMatic P
Special feature		For timber doors and doors with wicket doors
Equipment		Photocell
Pull and push force	650 N	750 N
Peak force	800 N	1000 N
Opening speed max.	22 cm/s	22 cm/s
Max. door width	5500 mm	6000 mm
Max. door surface	13,75 m²	15 m²

ProMatic, the good-value starter model as an introduction to Hörmann's premium quality

- As standard with two, 2-button hand transmitters HSE 2 BS with black textured surface
- Adjustable venting feature
- ProMatic Akku for garages without a power connection
- Optional solar module to recharge the battery

HSE 2 BS textured black with plastic caps

ProMatic Akku with solar module

	ProMatic	ProMatic Akku
Special feature		For garages without power connection
Pull and push force	600 N	350 N
Peak force	750 N	400 N
Opening speed max.	14 cm/s	13 cm/s
Max. door width	5000 mm	3000 mm
Max. door surface	11,25 m²	8 m²

* The complete warranty conditions can be found at: www.hoermann.com

Mobile and stationary

With Hörmann, everything fits together. Using the same hand transmitter, you can operate your garage door as well as an entrance gate equipped with a fully compatible Hörmann operator or other devices with Hörmann receivers. With the BiSecur app, you can conveniently control your Hörmann garage door or entrance gate operators, Hörmann entrance door* and other devices using your smartphone or tablet. You can also display the door position for your garage door or entrance gate, as well as the locking state of your entrance door* while on the go.

* With special equipment

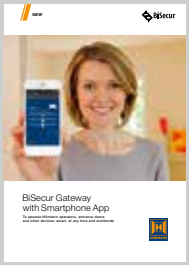

For further information,
see the BiSecur Gateway brochure.

reddot design award
honourable mention 2011

Hand transmitter HS 5 BS
4 button functions
plus query button,
1 High-gloss black or white
2 Black texture

Hand transmitter 4 BS
4 button functions,
3 High-gloss black

Hand transmitter 1 BS
1 button functions,
4 High-gloss black

Hand transmitter HSE 1 BS
1 button function,
incl. eyelet for key ring
5 High-gloss black

Hand transmitter HSE 2 BS
2 button functions
incl. eyelet for key ring
6 High-gloss black or white
7 High-gloss green, purple, yellow, red, orange

(Shown from left to right)

8 Textured black
with chrome or plastic caps
9 Decors in silver, carbon, light rootwood, light timber, dark timber, dark rootwood

(Shown from left to right)

reddot design award
winner 2007

10 11

10 Hand transmitter
HSD 2-A BSA
Aluminium look,
2 button functions,
can also be used as a key ring

11 Hand transmitter
HSD 2-C BS
High-gloss chrome,
2 button functions,
can also be used as a key ring

12

12 Hand transmitter
HSP 4 BS
4 button functions,
with button lock-out,
incl. key ring

13 14

13 Hand transmitter
HSZ 1 BS
1 button function,
for insertion in vehicle
cigarette lighter

14 Hand transmitter
HSZ 2 BS
2 button functions,
for insertion in vehicle
cigarette lighter

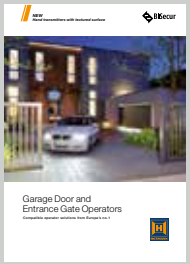

For further information,
see the BiSecur Gateway brochure.

Position of anchors

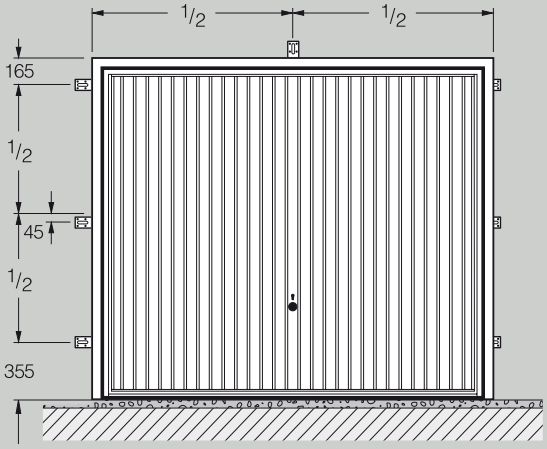

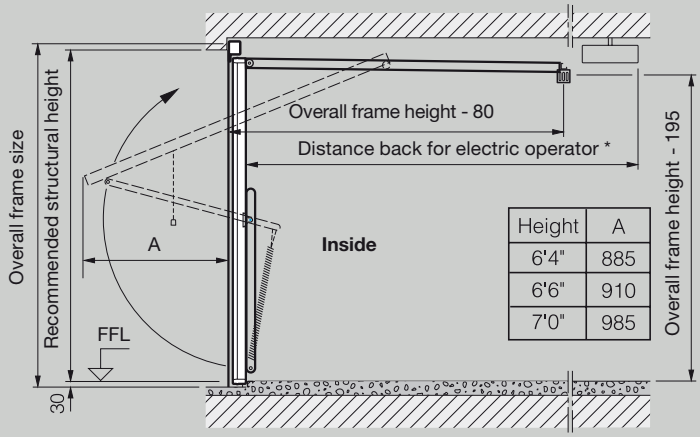

Height	A
6'4"	885
6'6"	910
7'0"	985

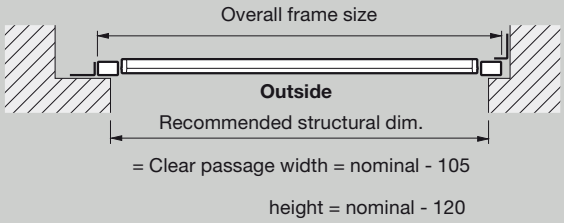

* Distance back for ProMatic / SupraMatic electric operator:
3200 mm up to door height 2500 mm
3450 mm up to door height 2750 mm

Fitting behind the opening

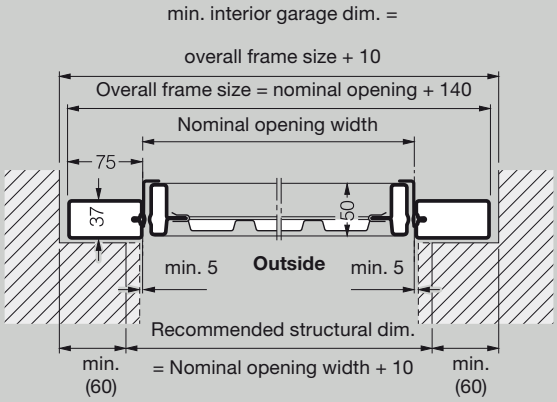

Door with flat floor

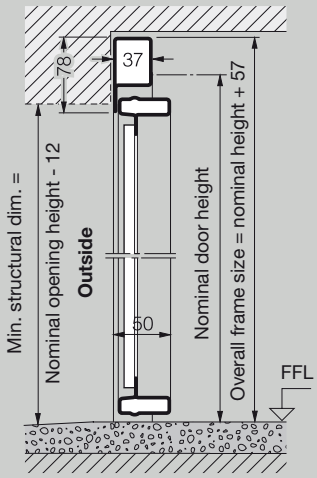

The recommended structural dimensions are recommended planning dimensions. Minimum sideroom, headroom and opening sizes are all based on these dimensions.

With ProMatic / SupraMatic operator
No additional headroom required.
Exception: some timber designs allow 15 mm clearance.

Fitting in the opening

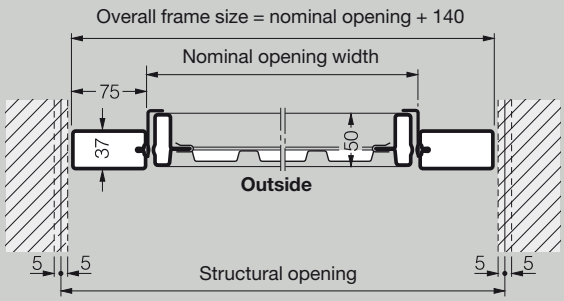

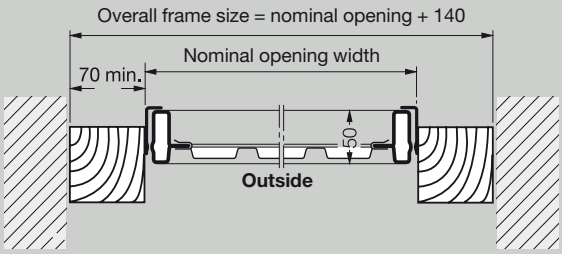

Fitting in the opening requires that the given dimensions be adhered to with greater accuracy.

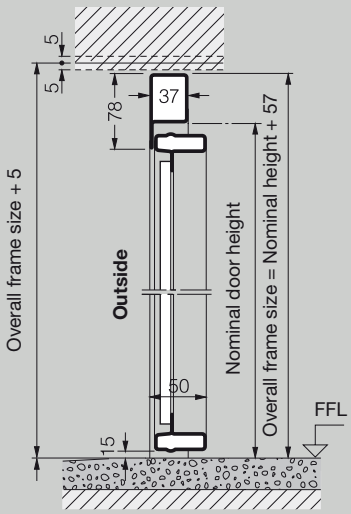

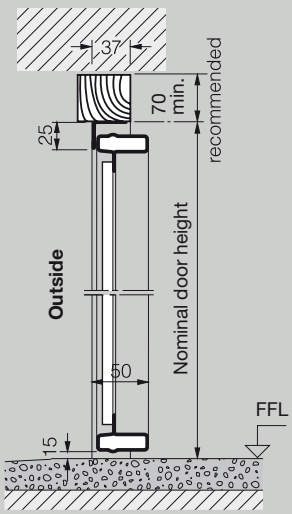

With ProMatic / SupraMatic operator
No additional headroom required.
Exception: some timber designs allow 15 mm clearance.

Position of anchors

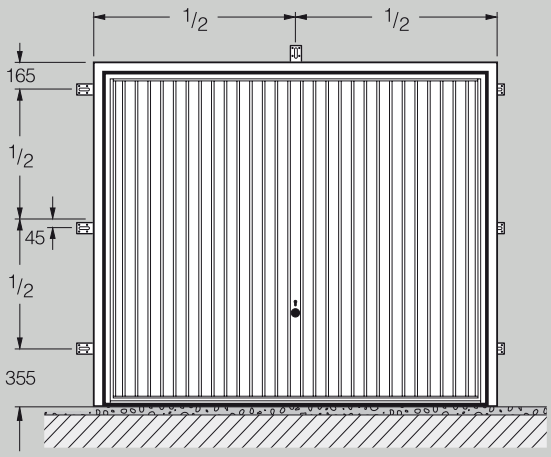

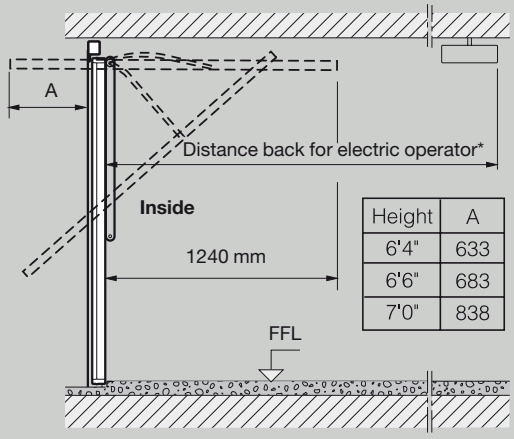

Height	A
6'4"	633
6'6"	683
7'0"	838

Clear passage
Width: nominal opening less 40 mm (1½")
only within bottom 1/3 due to flexible seals.
Height: nominal door height - 140.

For doors with operator 40 mm headroom above top crossframe required.
(Overall frame size + 40 mm)

Fitting behind the opening

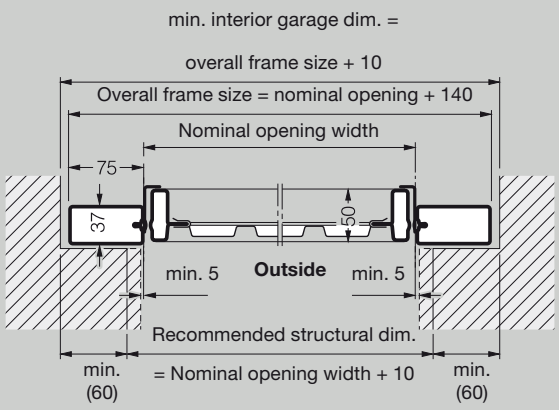

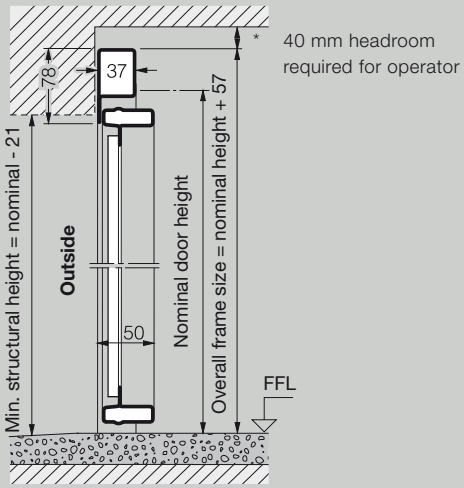

Behind opening installation with the Hörmann steel frame allows for a wider range of structural openings to be spanned, this can be particularly helpful with non-standard openings which would normally require special sized doors. The diagrams show the minimum tolerances that should be adhered to.

The overall frame sizes are shown as additions to the nominal opening sizes.

Fitting in the opening

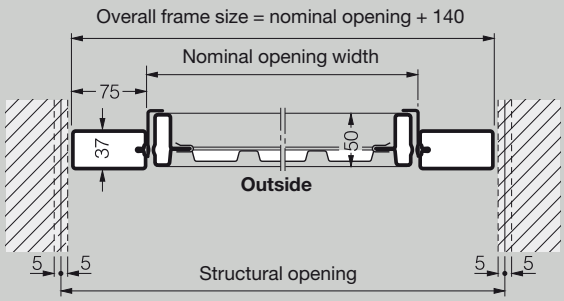

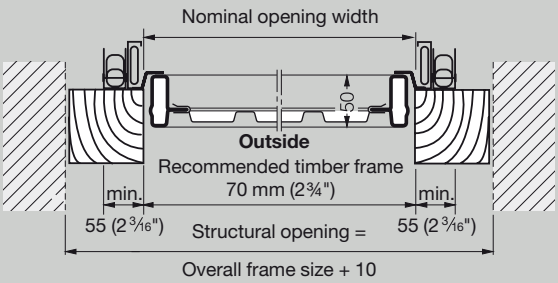

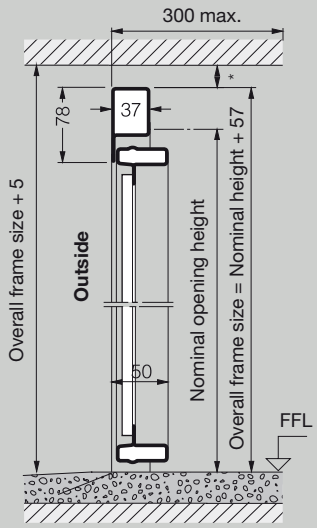

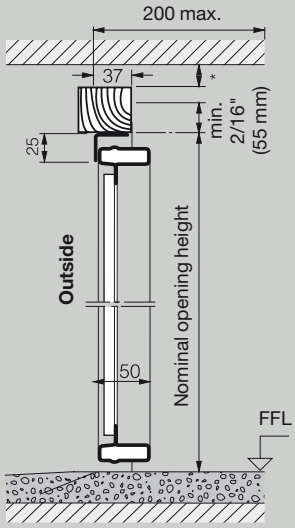

* 40 mm headroom required for operator

The size chart gives the structural opening sizes for each door size, this frame is the standard 2¾"(70 mm) square. A narrow application gear is provided for doors to be fixed to timber frames allowing the frame to be a minimum of 2 2/16"(55 mm) square if required, allowing the door to be fitted to smaller structural opening. For electric operation with canopy door a bow arm must be purchased separately.

For overall dimensions of Hörmann steel frame, add 5½ (140 mm) to nominal opening width and 2¼ (57 mm) to nominal opening height.

Position of anchors

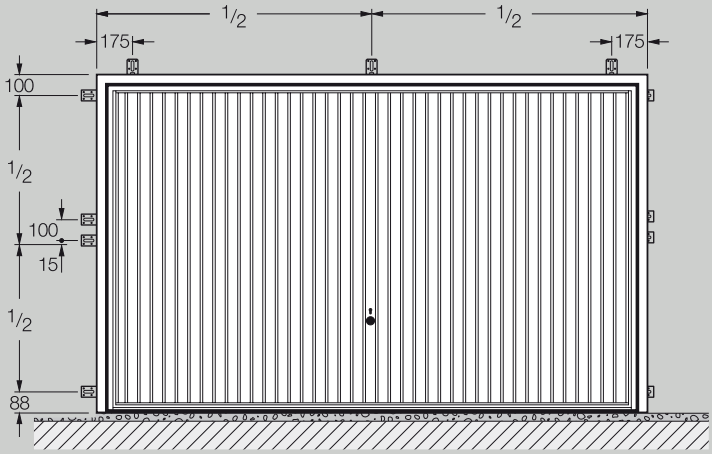

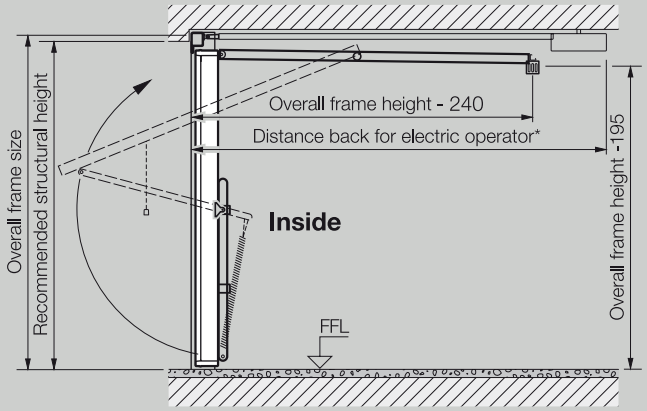

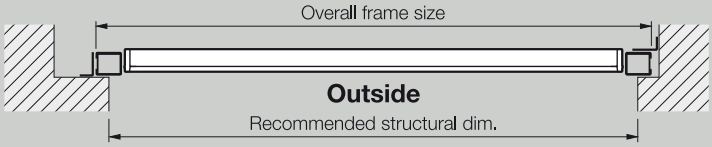

* Distance back for ProMatic / SupraMatic electric operator:
3200 mm up to door height 2500 mm
3450 mm up to door height 2750 mm

Fitting behind the opening

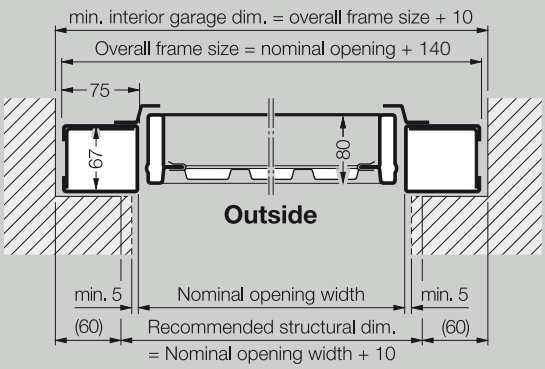

The recommended structural dimensions are recommended planning dimensions. Minimum sideroom, headroom and opening sizes are all based on these dimensions.

Door with flat floor

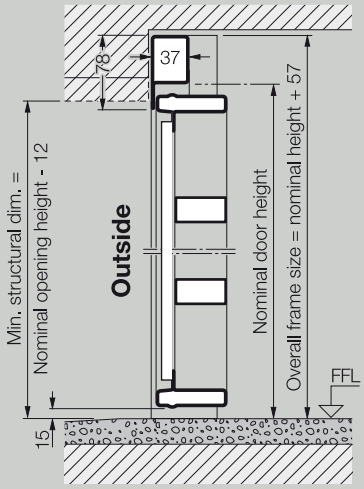

With ProMatic / SupraMatic operator
No additional headroom required.
Exception: some timber designs allow 15 mm clearance.

Fitting in the opening

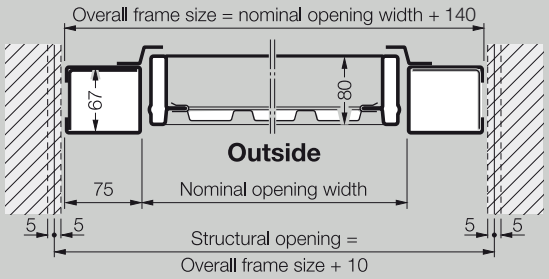

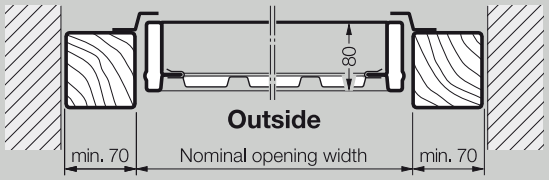

Fitting in the opening requires that the given dimensions be adhered to with greater accuracy.

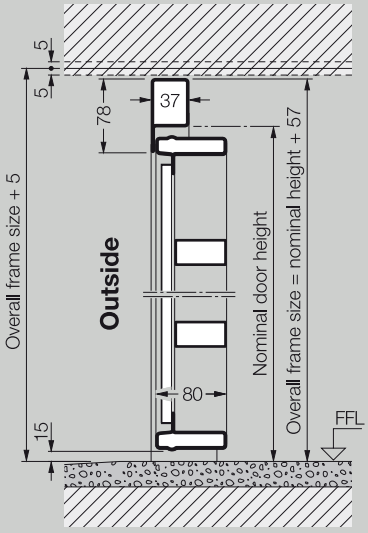

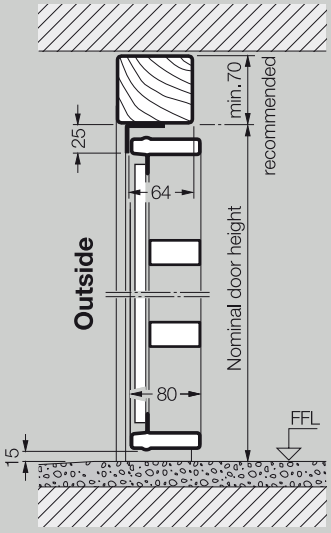

With ProMatic / SupraMatic operator
No additional headroom required.
Exception: some timber designs allow 15 mm clearance.

Single leaf

Position of anchors

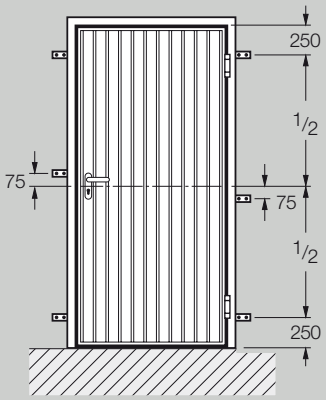

Standard sizes for single-leaf doors (Dimensions in mm)

Ordering size (BR)		Structural opening		Clear passage dimensions			Height of lever handle
					with threshold	without threshold	
Width	Height	Width	Height	Width	Height	Height	from FFL
875	1875	885	1880	830	1837	1852	990
875	2000	885	2005	830	1962	1977	1050
875	2125	885	2130	830	2087	2102	1110
1000	2000	1010	2005	955	1962	1977	1050
1000	2125	1010	2130	955	2087	2102	1110

Standard sizes with steel infill and open-for-infill frames are supplied for external fitting as standard. For internal fitting, fittings can be reversed. Designs with timber infill for external fitting only.

Block frame for fitting into the opening: dimensions and versions on request.

Maximum size range (BR): 1250 x 2375 mm.

Single leaf door with stepped floor

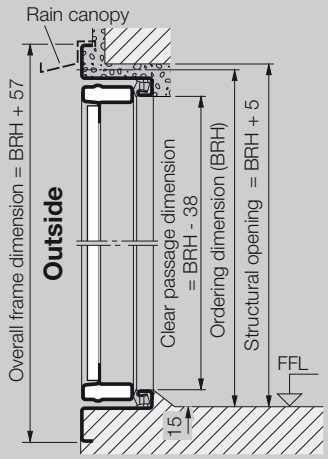

Single leaf door

Supplied with bottom threshold as standard, will be removed on site

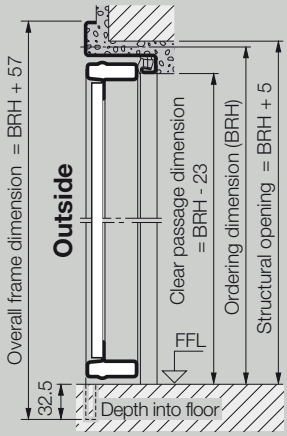

Single leaf door

Supplied without bottom threshold

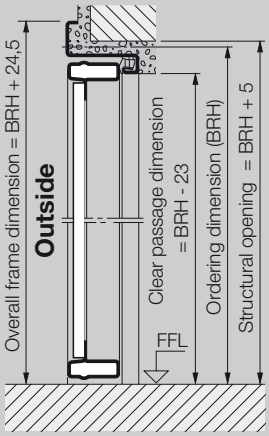

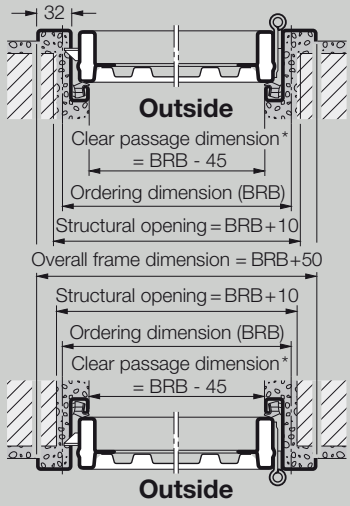

* With an opening angle of less than 180°, the clear passage width is reduced.

Double leaf

Position of anchors

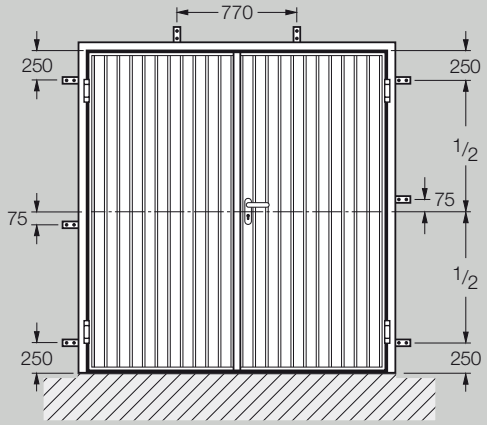

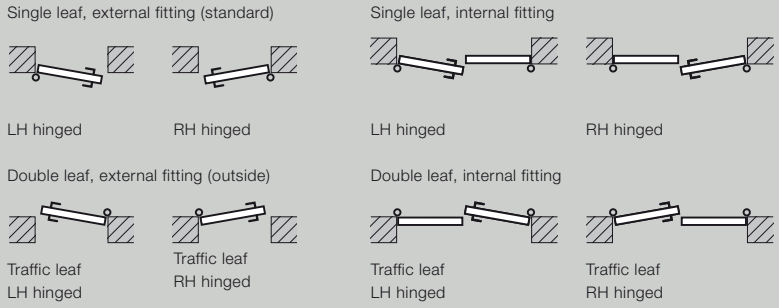

External fitting with threshold profile.
For internally fitted doors, the threshold angle / transport angle should always be removed. Adequate water drainage to the outside must then be ensured. For doors on the weather side external fitting is preferable.

Supplied as standard for external fitting, traffic leaf on the right.
State on order if internal fitting or left hand traffic leaf is required.
Equal division of leaves only.

Block frame for fitting into the opening: dimensions and versions on request.

Size range: Width (ordering size) from 1300 to 2500 mm,
Height (ordering size) Panelled designs only up to BRB = 2000 mm.

Door with flat floor

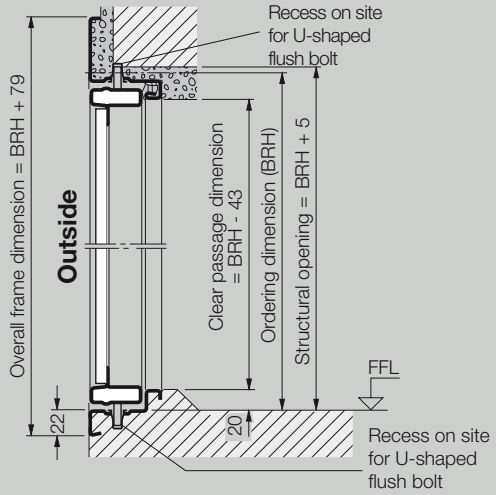

Door with stepped floor

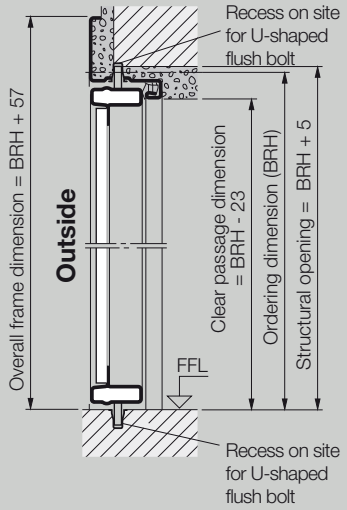

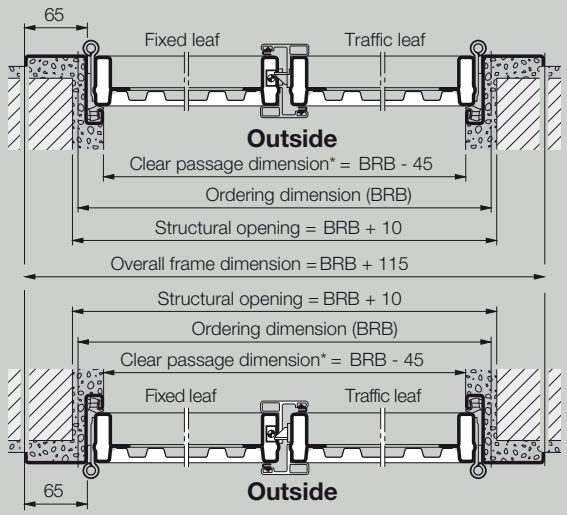

* With an opening angle of less than 180°, the clear passage width is reduced.

Hörmann: Quality without Compromise

Hörmann KG Amshausen, Germany

Hörmann KG Antriebstechnik, Germany

Hörmann KG Brandis, Germany

Hörmann KG Brockhagen, Germany

Hörmann KG Dissen, Germany

Hörmann KG Eckelhausen, Germany

Hörmann KG Freisen, Germany

Hörmann KG Ichtershausen, Germany

Hörmann KG Werne, Germany

Hörmann Genk NV, Belgium

Hörmann Alkmaar B.V., Netherlands

Hörmann Legnica Sp. z o.o., Poland

Hörmann Beijing, China

Hörmann Tianjin, China

Hörmann LLC, Montgomery IL, USA

Hörmann Flexon LLC, Burgettstown PA, USA

Hörmann is the only manufacturer worldwide that offers you a complete range of all major building products from one source. We manufacture in highly-specialised factories using the latest production technologies. The close-meshed network of sales and service companies throughout Europe, and activities in the USA and China, make Hörmann your strong partner for first-class building products, offering “Quality without Compromise”.

GARAGE DOORS

OPERATORS

INDUSTRIAL DOORS

LOADING EQUIPMENT

HINGED DOORS

DOOR FRAMES

Hörmann (UK) Ltd, Gee Road, Coalville, Leicestershire LE67 4JW
Phone (01530) 513000, Fax (01530) 513001

Issue 05.2016 / Print 05.2016 / HF 84131 en-GB / G.xxx www.hoermann.com